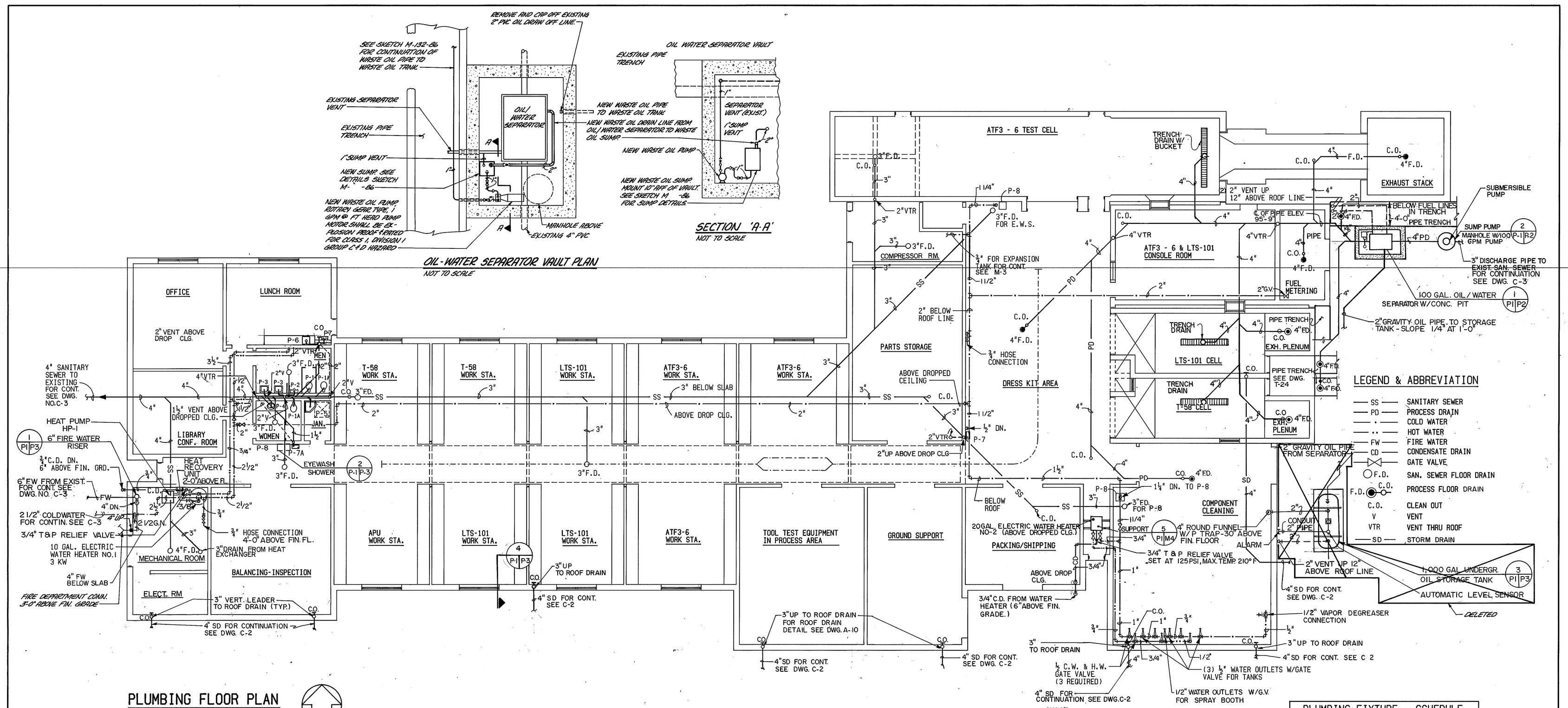

LEGEND & ABBREVIATION

SS	SANITARY SEWER
PD	PROCESS DRAIN
·	COLD WATER
··	HOT WATER
FW	FIRE WATER
CD	CONDENSATE DRAIN
	GATE VALVE
F.D.	SAN. SEWER FLOOR DRAIN
F.D. C.O.	PROCESS FLOOR DRAIN
C.O.	CLEAN OUT
V	VENT
VTR	VENT THRU ROOF
SD	STORM DRAIN

PLUMBING FIXTURE - SCHEDULE

NO.	FIXTURE	C.W.	H.W.	WASTE
P-1	WATER CLOSET	1"	—	4"
P-1A	H.C. WATER CLOSET	1"	—	4"
P-2	URINAL	3/4"	—	2"
P-3	WALL MOUNT. LAVATORY	1/2"	1/2"	1 1/2"
P-4	COUNT. TOP LAVATORY	1/2"	1/2"	1 1/2"
P-5	FLOOR SINK	1 1/2"	1/2"	2"
P-6	COUNT. TOP SINK	1/2"	1/2"	2"
P-7	WATER COOLER	1/2"	—	1 1/2"
P-7A	H.C. WATER COOLER	1/2"	—	1 1/2"
P-8	EYE WASH & SHOWER	1 1/4"	—	1 1/4"

NOTE:

1. FOR PROCESS DRAIN RISER DIAGRAM AND COLD AND HOT WATER SUPPLY RISER DIAGRAM FOR COMPONENT CLEANING ROOM SEE SHEET P 2
2. FOR EXTENT AND COVERAGE OF SPRINKLER SYSTEM, SEE SPECIFICATIONS

RECORD DRAWING AS ON 2-22-88

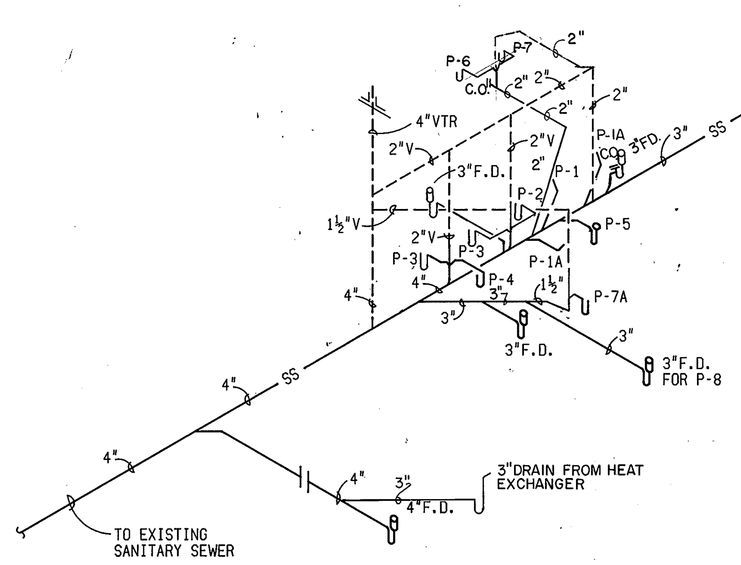

SANITARY SEWER-WASTE, SOIL & VENT RISER DIAGRAM

SCALE: NONE

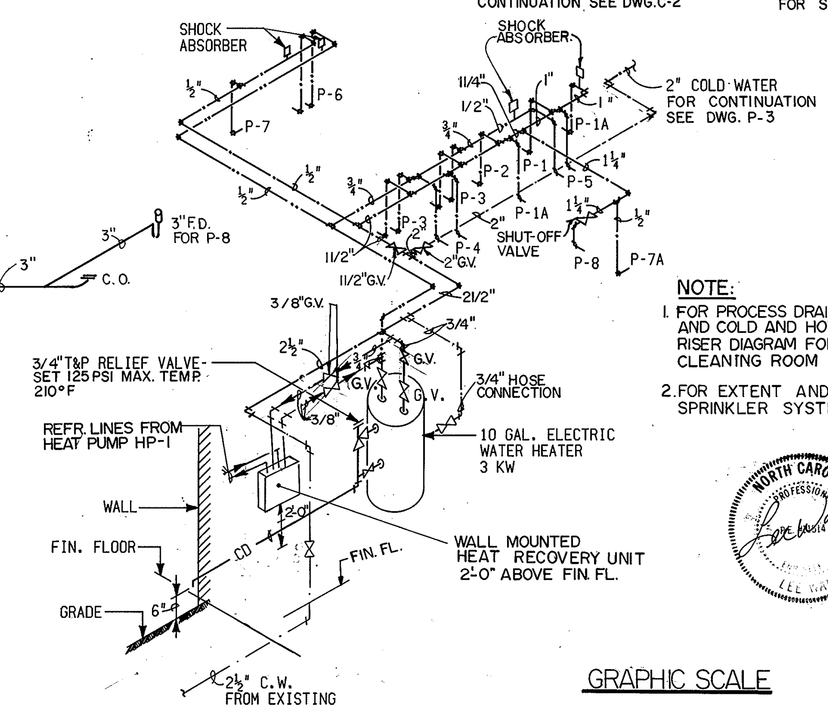

COLD & HOT WATER SUPPLY RISER DIAGRAM (MEN, WOMEN & JAN.)

SCALE: NONE

GRAPHIC SCALE

5' 0 5' 10' 15' 20'

SCALE: 1/8" = 1'-0"

REV.	DATE	APPR.	DESCRIPTION	BY
DESIGNED	HV			
DRAWN	FP			
TRACED				
CHECKED	FF			
REVIEWED				
REVIEWED				
REVIEWED				

U.S. COAST GUARD HEADQUARTERS, WASHINGTON, D.C.

CIVIL ENGINEERING

ENGINE TEST & REPAIR FACILITY
AIRCRAFT REPAIR AND SUPPLY CENTER
ELIZABETH CITY, N.C.

PIPING LAYOUT

APPROVED: P.K. Valvade — CHIEF OF DIVISION — DATE 1/18/85

LEE WAN & ASSOCIATES, INC.
engineers
architects
surveyors
4321 Memorial Drive, Suite P, Decatur, Georgia 30032

PROJECT NUMBER 400185 — P1

SCALE: AS NOTED — SHEET 27 OF 67